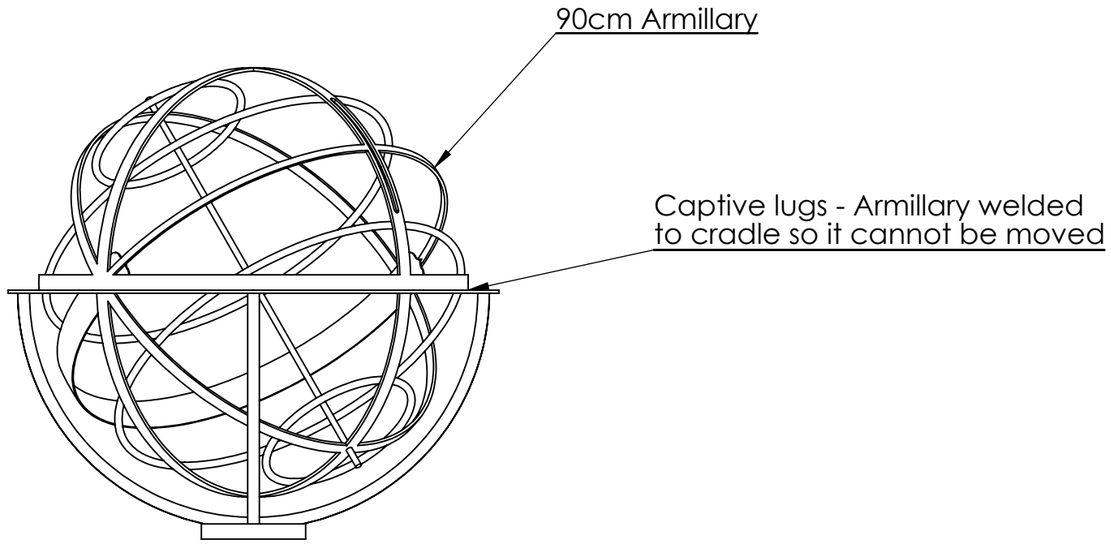

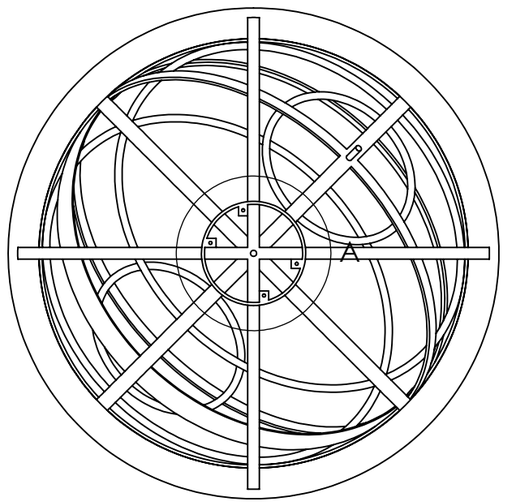

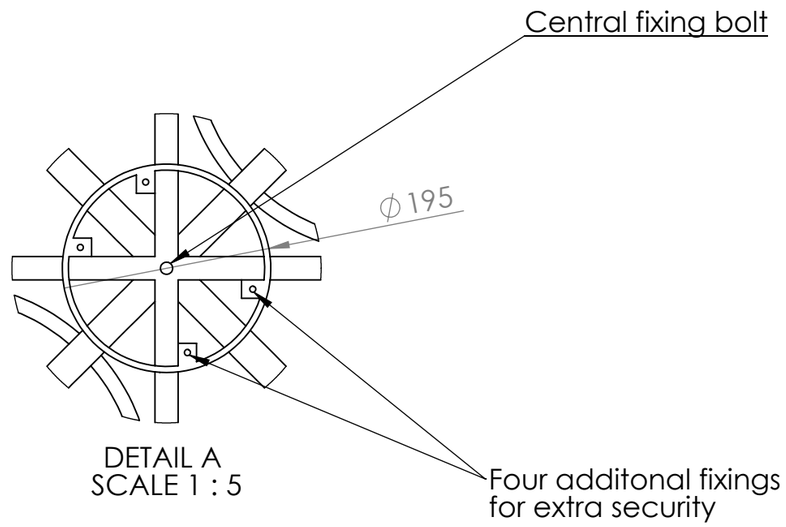

DETAIL A
SCALE 1 : 5

	DAVID HARBER LTD BLEWBURTON BARNS, HAGBOURNE ROAD ASTON UPTHORPE, OXFORDSHIRE OX11 9EE	© COPYRIGHT TEL: 01235 859 300	ALL DIMS. IN MM	3RD ANGLE	QTY: 1	MATERIAL:	DRAWING NAME: 90 Armillary	NOTES:
			DRAWN: K.RIAT	SCALE: 1:10	PAPER SIZE: A3	DATE: 27/03/2012	DRAWING No: Armillary with Security Fixings	